**ALL WELDED - SERIES 52 - SINGLE LOCKER UNIT - ONE COMPARTMENT - STD BODY - STD DOOR - 18 x 15 x 72**

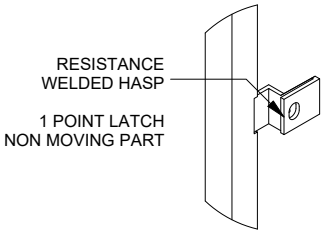


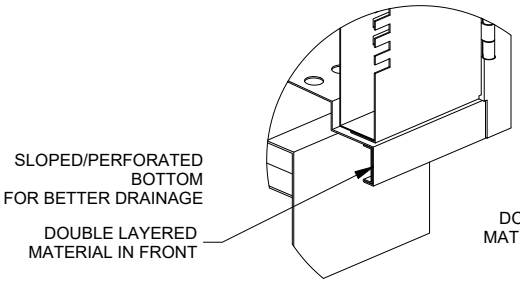


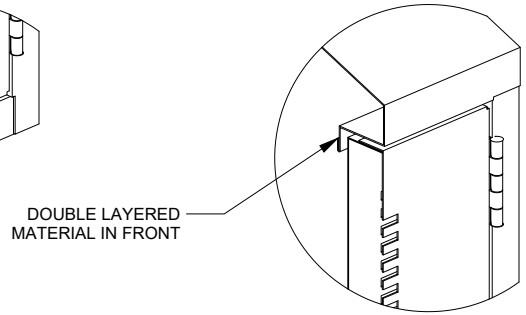


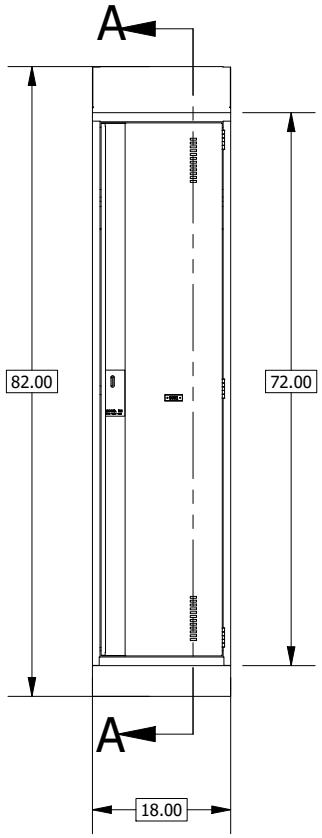


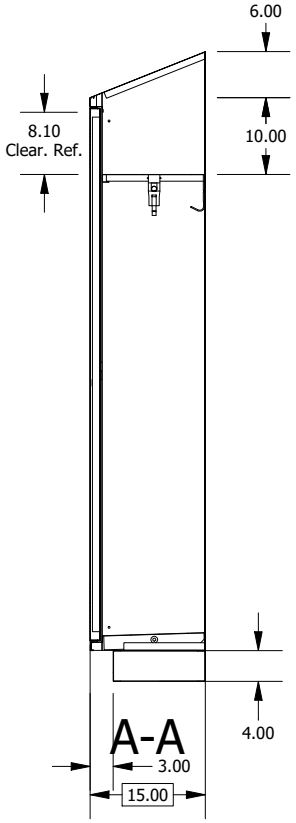


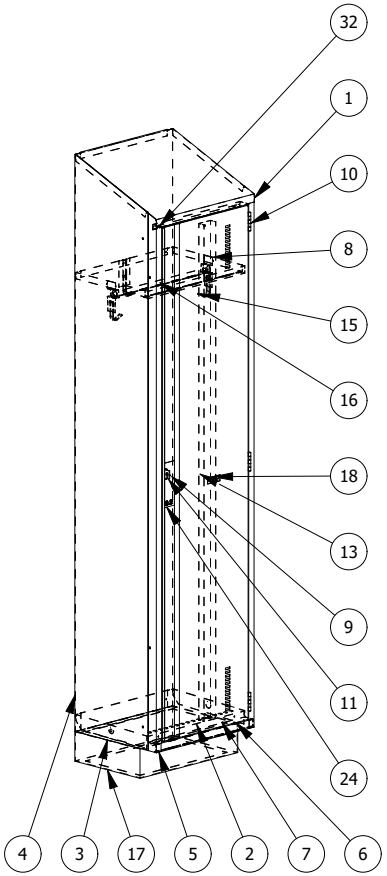


TECHNICAL SPECIFICATIONS

| # | DESCRIPTION | MATERIAL |
|---|---|---|
| 1 | INTEGRATED SLOPING TOP | 20GA CRS |
| 2 | PERFORATED BOTTOM | 20GA GALV. |
| 3 | SIDES | 22GA CRS |
| 4 | BACK | 22GA CRS |
| 5 | FRAME | 16GA CRS |
| 6 | PERFORATED DOOR 52 EXT. | 20GA CRS |
| 7 | PERFORATED DOOR 52 INT. | 22GA CRS |
| 8 | SHELF | 22GA CRS |
| 9 | HASP | 11GA CRS |
| 10 | 2-1/2" HINGES 5 KNUCKLES | 14GA CRS |

OPTIONS

| # | DESCRIPTION | MATERIAL |
|---|---|---|
| 13 | DOOR STIFFENER | 22GA CRS |
| 15 | 3 FLAT HOOKS-ROUNDED TIP | 1/8x1/2 CRS |
| 16 | COAT BAR DIA 0.7" | 22GA GALV. |
| 17 | RECESSED BASE | 18GA GALV. |
| 18 | NUMBERED PLATES ____ @ ____ | BLACK PLASTIC |
| 24 | ALUMINIUM PLATE | 22 ALUMINIUM |
| 32 | BUMPERS | - |

POWDER COAT FINISH

BODY COLOR:
DOOR COLOR:
BASE COLOR:

PROJECT
LIN01 -- South Orangetown Ambulance Corp - BASE

CLIENT
:
South Orangetown

APPROVAL : CLIENT SIGNATURE
NAME: _____ DATE: _____

QUOTE

ORDER #

DRAWING NUMBER
299a5abf

TOTAL WEIGHT: 81 LBS
FRAME WEIGHT: 53 LBS
DOOR WEIGHT: 28 LBS

| REV | DATE | DRAFTED BY | DESCRIPTION |
|---|---|---|---|
| 0 | 2025-10-20 | J.F. RICHER | |
| 1 | | | |
| 2 | | | |

PRODUCT
**ALL WELDED - SERIES 52 - SINGLE LOCKER UNIT**
**ONE COMPARTMENT - STD BODY - STD DOOR - 18 x 15 x 72**

LINCORA LOCKERS

IMAGINE YOUR LOCKER

PREMIUM
STANDARD AND CUSTOM LOCKERS
1-800-564-9001
www.lincora.com

1/1

R27

LINCORA HAS THE OPTION TO GO FOR SINGLE, DOUBLE OR TRIPLE UNITS.
INFORMATION CONTAINED HEREIN IS PROPRIETARY OF LINCORA AND IS NOT TO BE REPRODUCED NOR COMMUNICATED TO ANY THIRD PARTY WITHOUT WRITTEN PERMISSION.